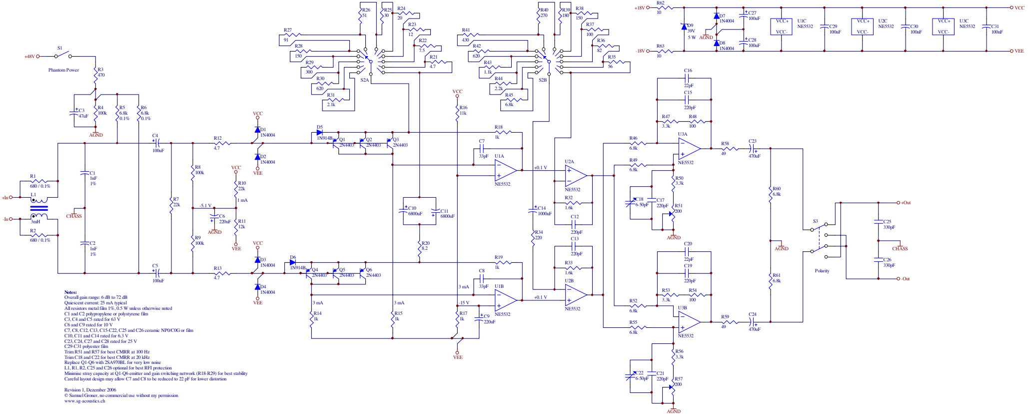

Notes:
Overall gain range: 6 dB to 72 dB
Quiescent current: 25 mA typical
All resistors metal film 1%, 0.5 W unless otherwise noted
C1 and C2 polypropylene or polystyrene film
C3, C4 and C5 rated for 63 V
C6 and C9 rated for 10 V
C7, C8, C12, C13, C15-C22, C25 and C26 ceramic NP0/C0G or film
C10, C11 and C14 rated for 6.3 V
C23, C24, C27 and C28 rated for 25 V
C29-C31 polyester film
Trim R51 and R57 for best CMRR at 100 Hz
Trim C18 and C22 for best CMRR at 20 kHz
Replace Q1-Q6 with 2SA970BL for very low noise
L1, R1, R2, C25 and C26 optional for best RFI protection
Minimise stray capacity at Q1-Q6 emitter and gain switching network (R18-R29) for best stability
Careful layout design may allow C7 and C8 to be reduced to 22 pF for lower distortion

Revision 1, Dezember 2006
© Samuel Groner, no commercial use without my permission
www.sg-acoustics.ch